Earth Science Technology Conference
June 24-26, 2003

Current Status of the High Efficiency L-band T/R Module Development for SAR Systems

Sponsored by the
Advanced Component Technology Program

Wendy N. Edelstein (JPL)

Contributors:
Constantine Andricos (JPL)
Soren Madsen (JPL)
David Rutledge (Caltech)
Feiyu Wang (Caltech)

Motivation

- NASA spaceborne SAR missions require large, lightweight, high power, electronically-steerable L-band phased-array antennas.
- High efficiency T/R modules enable increased transmit power or better use of limited resources.

Applications

- ***L-band Polarimetric SAR*** for measurement of soil moisture, biomass, land cover change, ocean circulation and ice motion
- ***L-band Interferometric SAR*** for measurement of surface deformation and surface strain accumulation due to seismic and volcanic activity
- ***L-band Interferometric SAR*** for natural and manmade hazard monitoring, assessment and disaster response

Objectives

Develop a high-power (30W), high-efficiency (70%), L-band T/R module for use in SAR antennas.

Technical Approach

Investigate L-band Class-E/F power amplifiers for use in high-efficiency T/R modules.

- Extend frequency of Class-E/F amplifiers to L-band
- Demonstrate the Class-E/F amplifier as an integral component of a radar T/R module
- Demonstrate a miniaturized high-efficiency T/R module compatible with lightweight antennas

Performance Goals

Parameter	Value
Frequency	1250 MHz
Bandwidth	80 MHz
Peak Transmit Power	30 Watts
Overall Module Efficiency	70%
Pulsewidth	50 msec
PRF	2000 Hz
Transmit Gain	48 dB
Receive Gain	25 dB
Receive Noise Figure	< 2.5 dB
Phase Shifter	6-bit
Rx Third Order Intercept (output)	> +5 dBm
Tx/Rx Programmable Attenuator	30 dB in 0.5 dB steps
VSWR	<1.5:1
T/R Module Mass	30 g
T/R Module Size	2.5in x 1.5in x 0.25in

Class-E/F Power Amplifiers

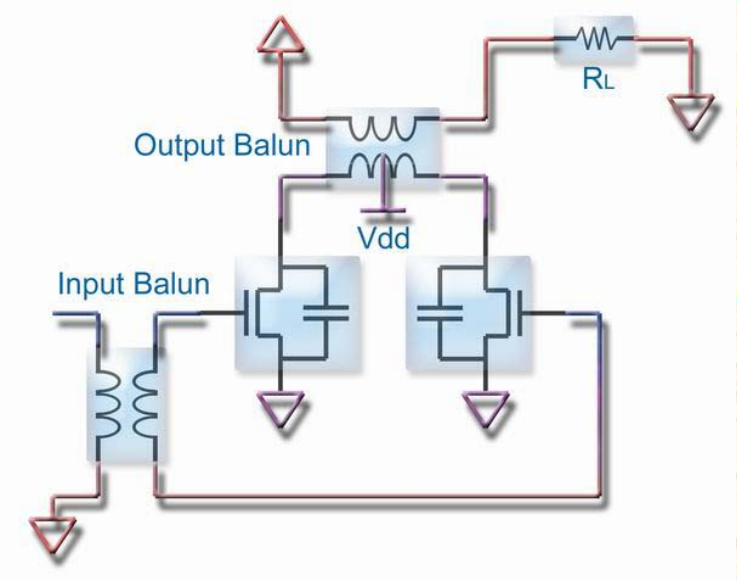

- Push-Pull Class-E/F switch-mode circuit topology
- Incorporates low loss microstrip banluns
- Efficiencies of 70-90% demonstrated at VHF/UHF frequencies*
  - Higher output power
  - Higher efficiency
  - Higher operating frequency
  - Lower peak voltage & RMS current
  - Simple circuit topology

* Kee, et al. "7-MHz, 1.1-kW Demonstration of the New $E/F_{2,odd}$ Switching Amplifier Class," 2001 IEEE MTT-S IMS.

Power Amplifier Benchmark

Freq	Pout	Efficiency	Type	Reference
1.9 GHz	30 W	35%	Class AB (LDMOS)	Motorola spec sheet
1.75 GHz	1.7 W	27%	Class C (CMOS)	Gray (Berkeley)
1.9 GHz	1 W	41%	Class E (CMOS) Off chip balun	Tsai & Gray (Berkeley)
144 MHz	54 W	70%	Class E, (LDMOS)	Zirath (Caltech)
7 MHz	1kW	85%	Class E/F	Kee (Caltech)
2.4 GHz	2.2W	31%	Class E/F (CMOS) Fully integrated	Aoki (Caltech)

High-Efficiency L-band Transmit/Receive Module for Synthetic Aperture Radar

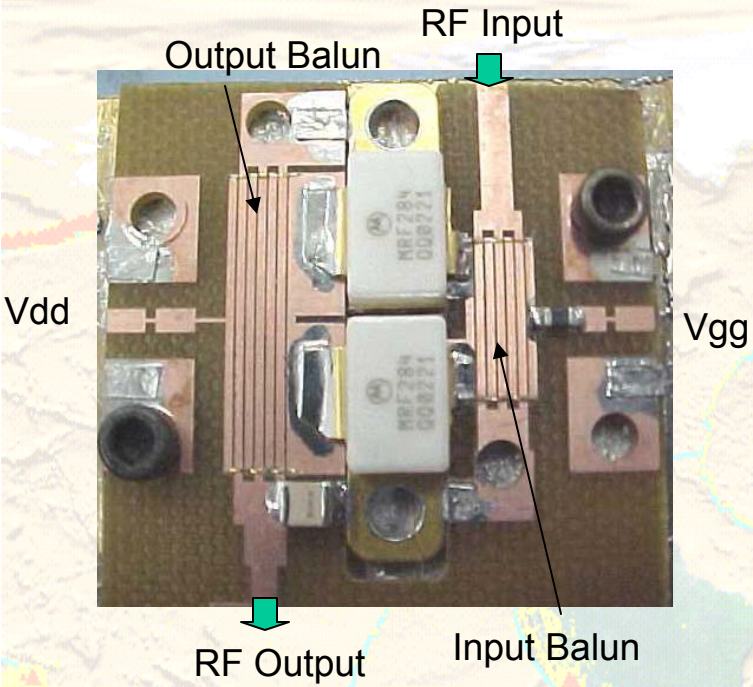

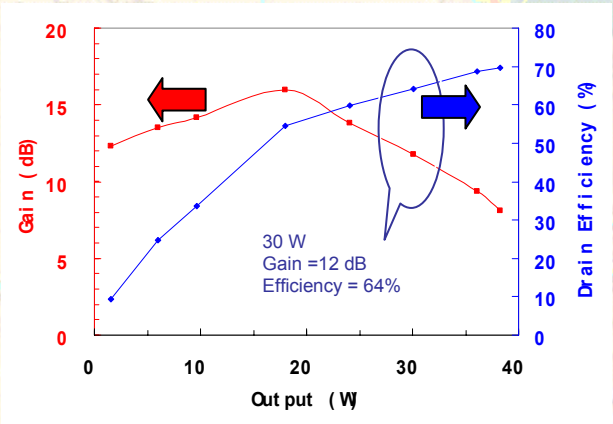

ClassE/F PA Results

Demonstrated a 30 W Class-E/F power amplifier at 900 MHz with 64% efficiency.

Current efforts include:

- Increasing frequency to 1250 MHz
- Increasing efficiency
- Exploring alternative power devices

L-band Microstrip Balun

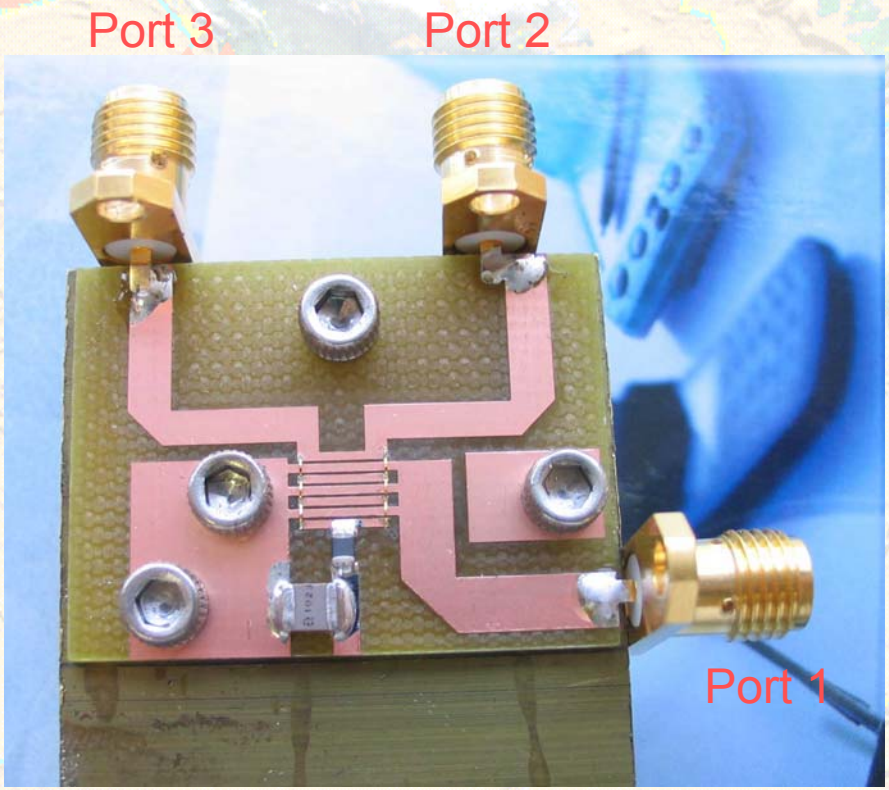

Interdigital Balun: k ~ 0.85

Microstrip balun:
- Low loss
- Small
- Planar

<u>Interdigital balun</u> improves coupling between the primary and the secondary inductors.
- Higher efficiency
- Wider bandwidth

High-Efficiency L-band Transmit/Receive Module for Synthetic Aperture Radar

Simulated vs. Measured Results

Input Balun S11

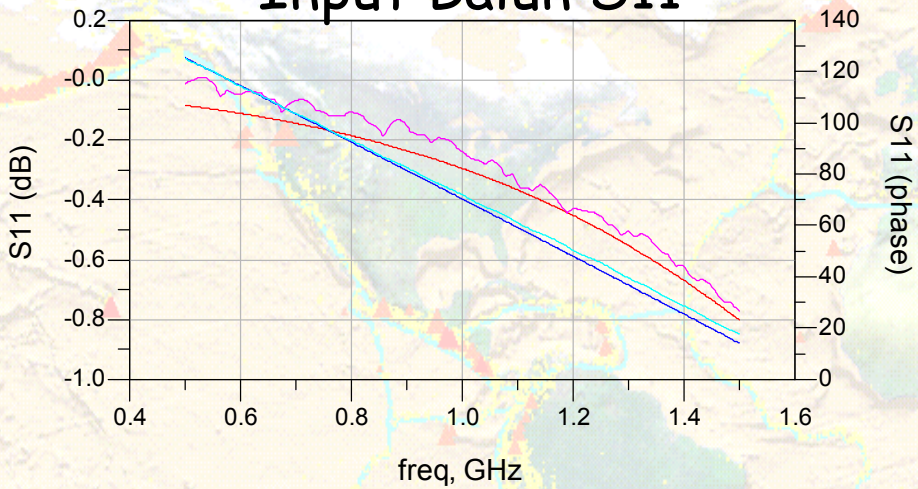

Input Balun S21

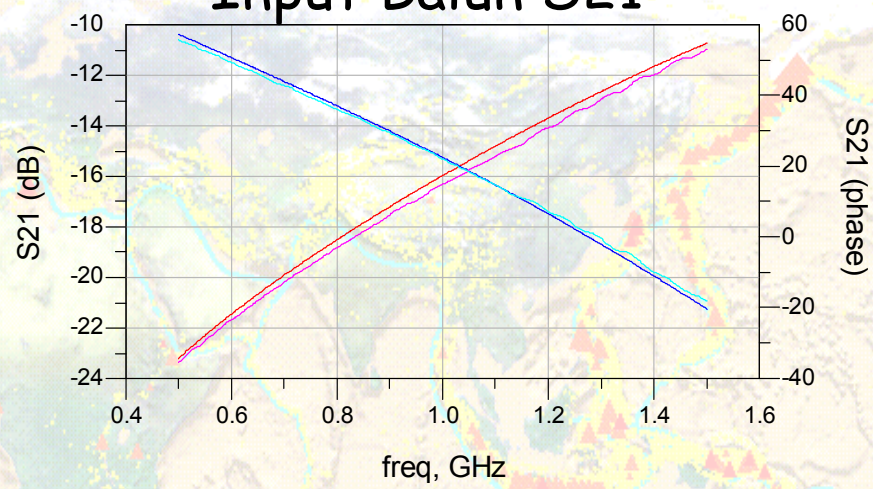

Simulated Input Balun with Matching Network

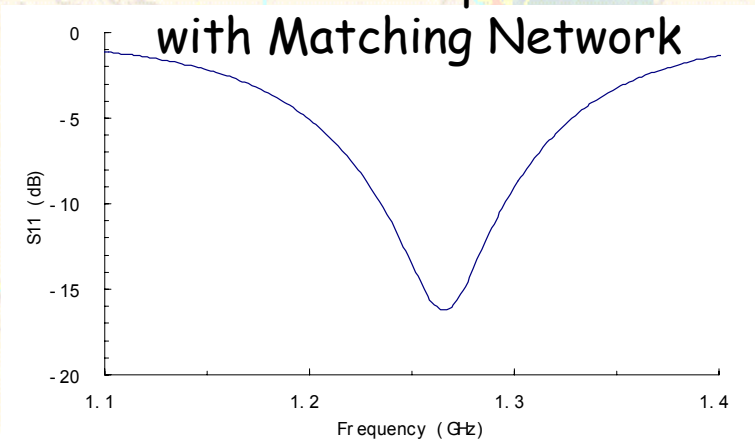

Simulated Amp/Phase Balance

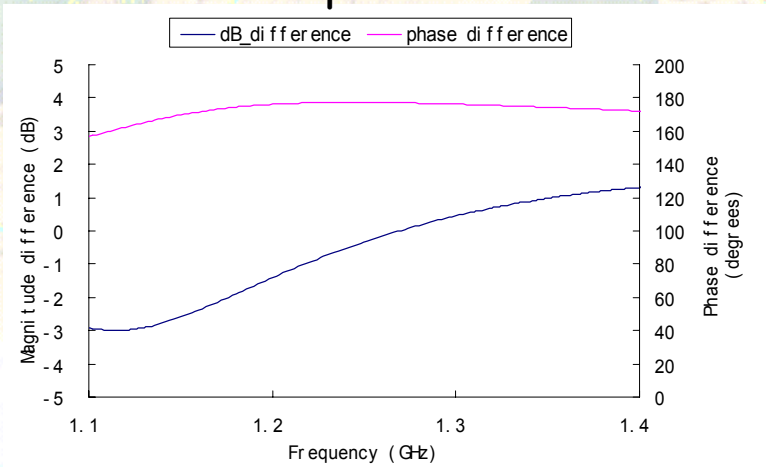

New Class-E/F Power Amplifier

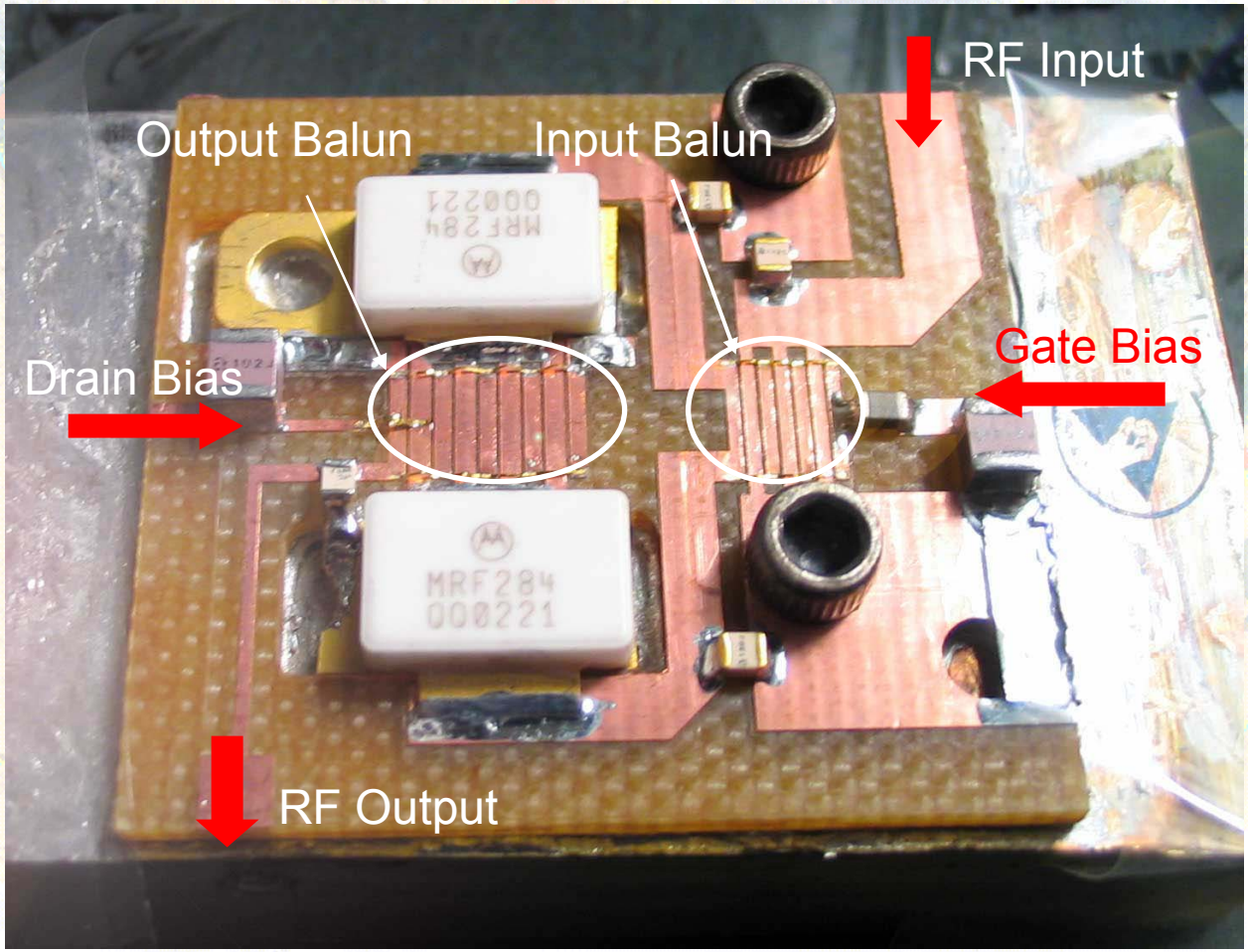

L-band T/R module block diagram

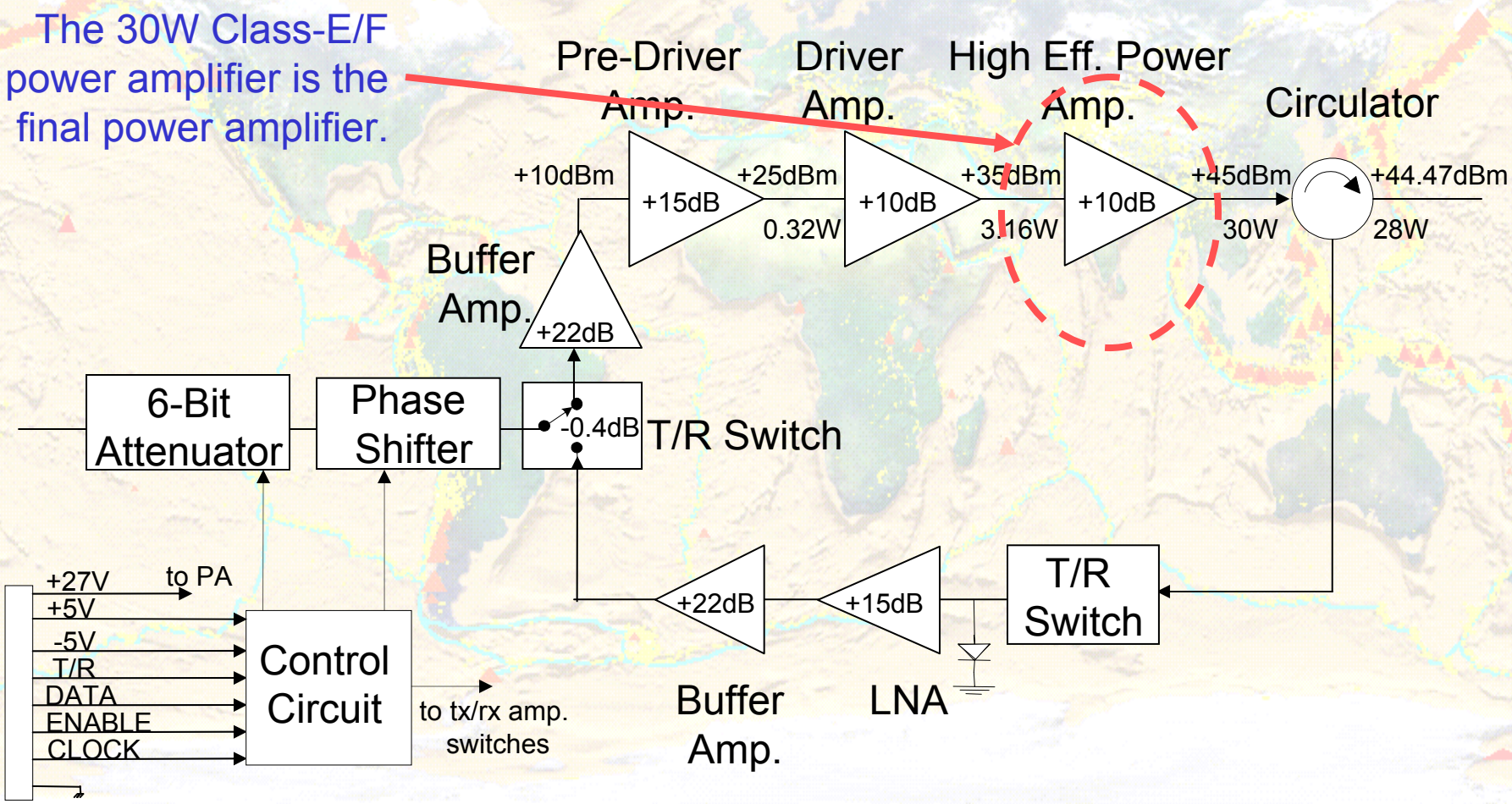

High-Efficiency L-band Transmit/Receive Module for Synthetic Aperture Radar

L-band T/R module Performance

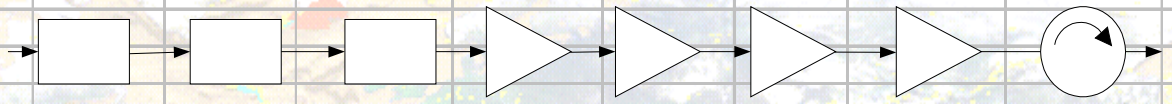

		SHIFTER	ATTEN	SWITCH	AMP	AMP	AMP	AMP	CIRCULATOR
Gain	**db**	-6.00	-3.00	-0.40	22.000	15.00	10.00	10.00	-0.30
Cumulative Gain	**db**	-6.00	-9.00	-9.40	12.600	27.60	37.60	47.60	47.30
Power In	**dbm**	-2.83	-8.83	-11.83	-12.228	9.77	24.77	34.77	44.77
Power In	**watts**				0.000	0.01	0.30	3.00	30.00
Power Out	**dbm**	-8.83	-11.83	-12.23	9.772	24.77	34.77	44.77	44.47
Power Out	**watts**			0.00	0.009	0.30	3.00	30.00	28.00
1 db comp	**dbm**	20.00	20.00	20.00	12.000	24.00	34.00	45.00	
Eff, drain	**%**				10.000	45.00	60.00	85.00	
Voltage	**v**				5.000	5.00	5.00	27.00	
+27v current	**amp**								
+5v current	**amp**				0.019	0.13	1.00	1.31	
Dc power	**watts**				0.095	0.67	5.00	35.30	
Power dissipated	**watts**				0.085	0.38	2.30	8.29	2.00
Total +27v current	**amp**	1.15							
Total +5v current	**amp**	1.31							
Total power	**watts**	41.06							
Transmit Eff	**%**	**73.07**							
Transmit Eff with circ	**%**	**68.19**							
Receive Chain	**watts**	0.1	(PS, Attn, LNA, sw)						
Total Avg DC Power	**watts**	4.21							
Overall Module Efficiency		**66.57**							

High-Efficiency L-band Transmit/Receive Module for Synthetic Aperture Radar

BREADBOARD HIGH EFFICIENCY 30 WATT L-BAND TRANSMIT/RECEIVE MODULE

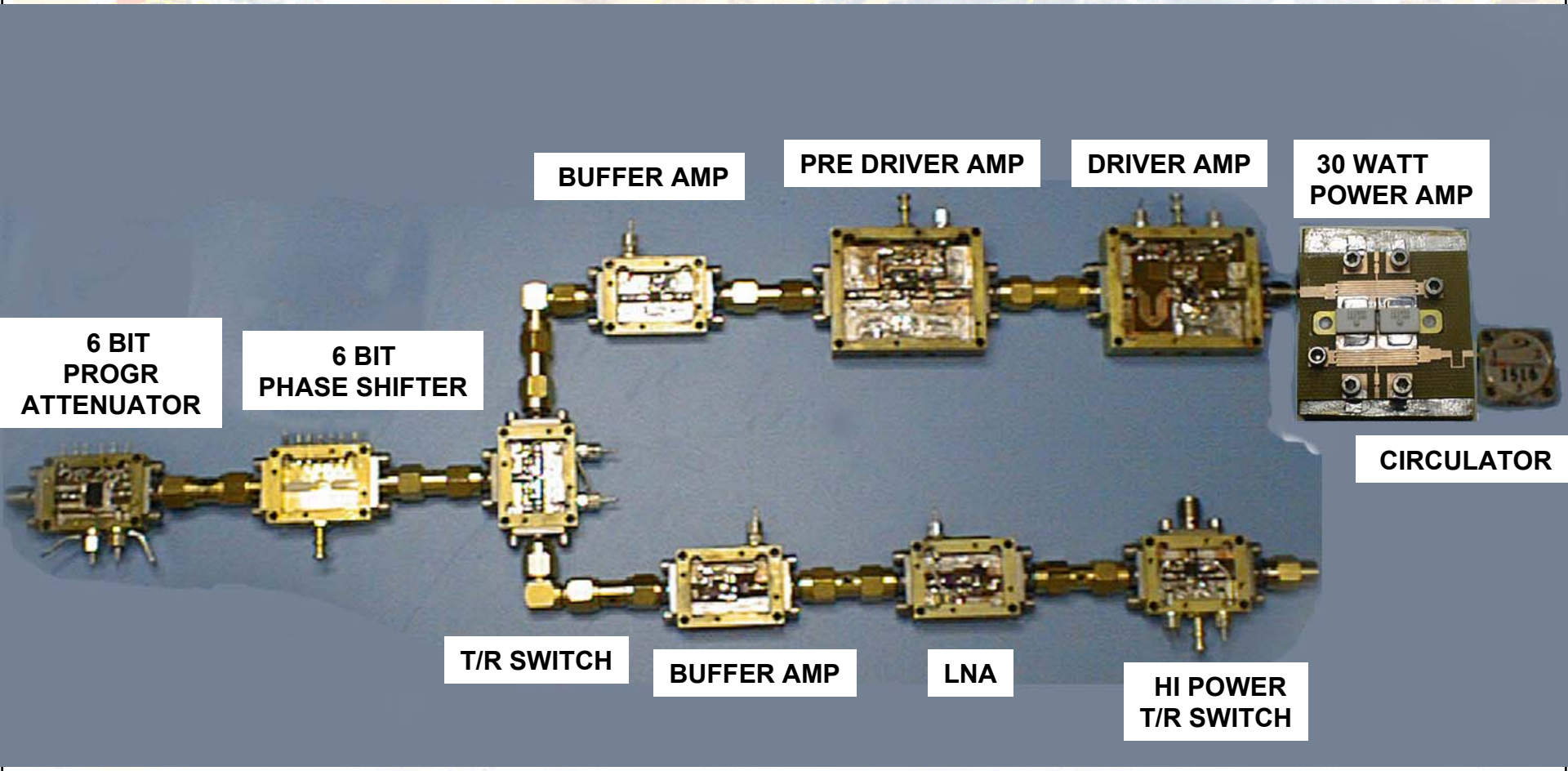

Testing of the T/R Module Breadboard

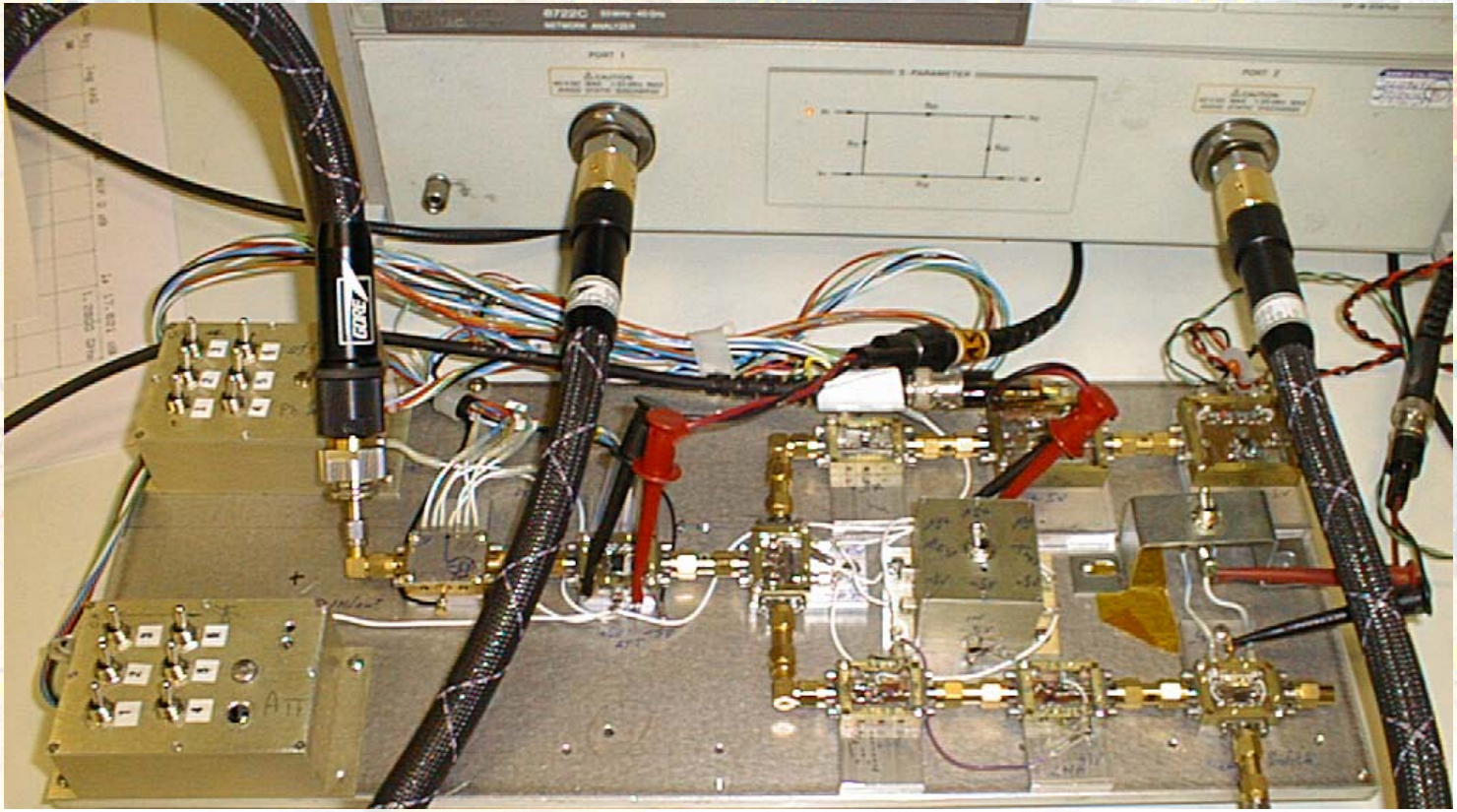

Preliminary layout of the integrated T/R module

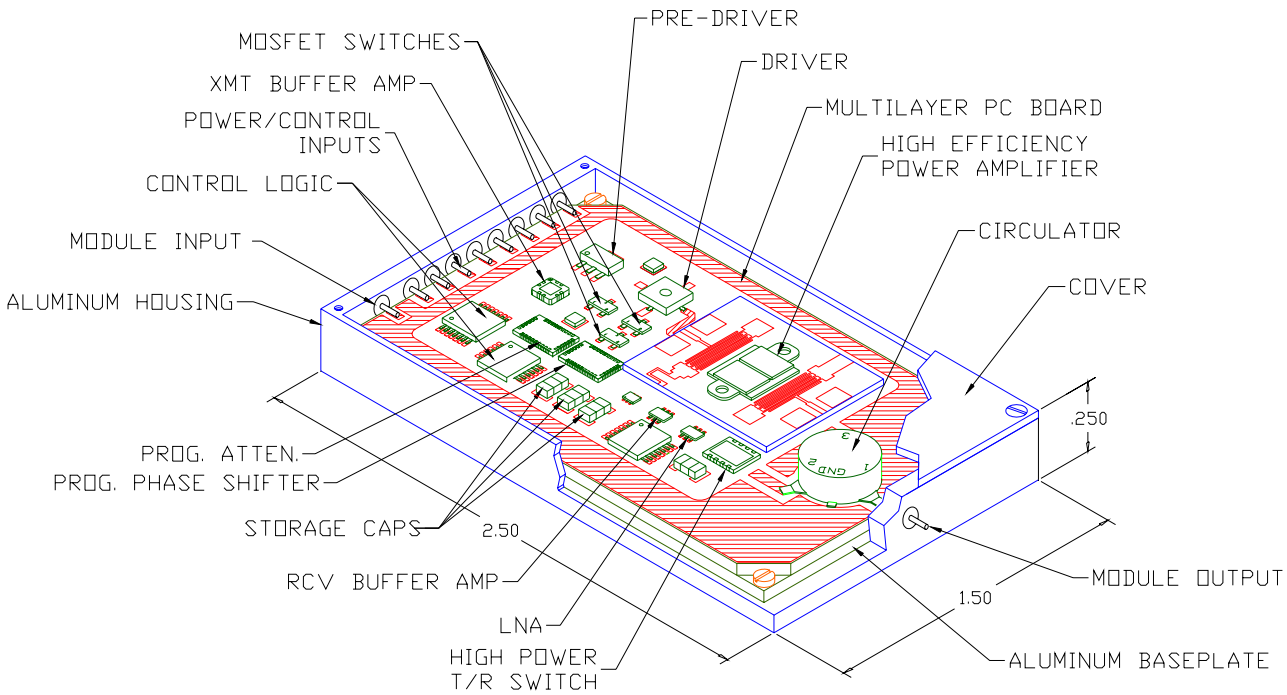

HIGH EFFICIENCY T/R MODULE

T/R Module Transmit Efficiency vs. Power Amplifier Drain Efficiency

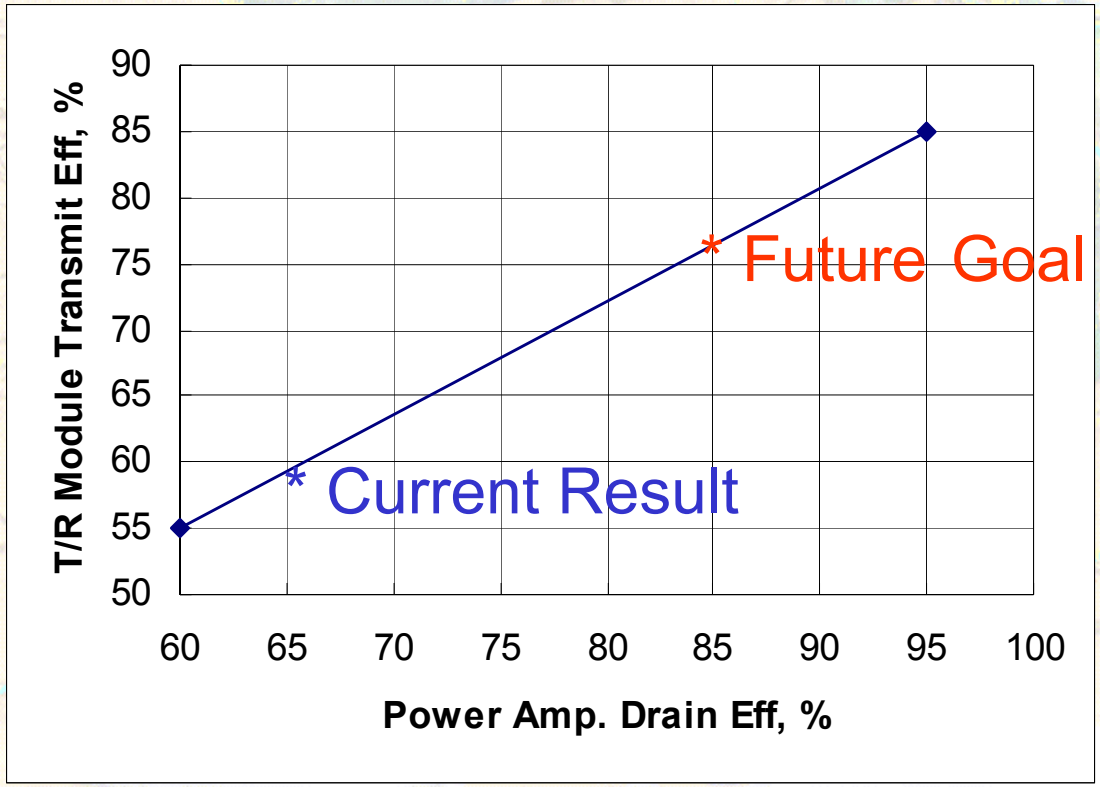

Current Result

65% PA Drain Efficiency (meas)
60% T/R Tx PAE (pred)
55% Overall Module Eff (pred)

Future Goal

85% PA Drain Efficiency
76% T/R Tx PAE
70% Overall Module Eff

Conclusions & Future Plans

- Demonstrated Class-E/F power amplifiers at microwave frequencies to achieve high power and high efficiencies.
- A low-loss, compact, planar, and interdigital microstrip balun was designed for the push-pull configuration.
- Designed and breadboarded a 3W T/R module to interface with the 30W PA.
- Will continue to push frequency and efficiency higher.
- Once feasibility of using Class-E/F amplifiers as T/R component is established we will focus on miniaturization.